2MP Fixed Dual-light Dome NetWork Camera

IPC322LE-ADF28(40)K-DL3

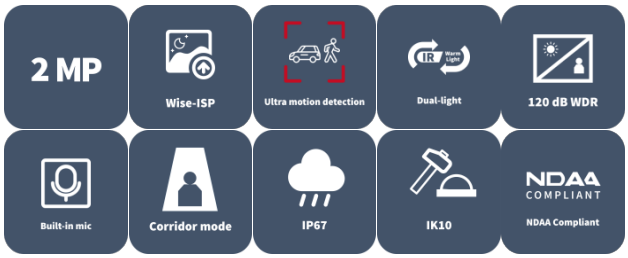

Features

- High quality image with 2 MP, 1/2.8" CMOS sensor
- 1080P (1920 × 1080)@30/25 fps; 720P (1280 × 720)@30/25 fps
- Ultra 265, H.265, H.264, MJPEG (Sub Stream Only)
- Wise-ISP technology ensures 24-hour full-color images
- Support ultra motion detection (human/ vehicle detection)
- 120 dB true WDR technology enables clear image in strong light scene
- Smart IR, up to 30 m (98.4 ft.) IR distance
- Warm light, up to 30 m (98.4 ft.) warm light distance
- Built-in mic
- Supports 9:16 corridor mode
- MicroSD, up to 512 GB
- Supports PoE power supply
- IK10 vandal resistant and IP67 protection

Distribuito da Gamma Commerciale Srl | www.gammacommerciale.it

Specifications

Model	IPC322LE-ADF28K-DL3	IPC322LE-ADF40K-DL3
Camera		
Max Resolution	2 MP	
Sensor	1/2.8" CMOS	
Min. Illumination	Color: 0.001 Lux (F1.6, AGC ON), 0 Lux with light	
Day/Night	IR-cut filter with auto switch (ICR)	
Shutter	Auto/Manual, 1 to 1/100000 s	
Adjustment Angle	Pan: 8° to 360°, Tilt: 0° to 68°, Rotate: 10° to 360°	
S/N	> 52 dB	
WDR	120 dB	
Lens		
Focal Length	2.8 mm	4.0 mm
Iris	F1.6	
Field of View (H)	100.3 °	86.5 °
Field of View (V)	56.0 °	46.6 °
Field of View (D)	116.4 °	102.5 °
Lens Type	Fixed	
Iris Type	Fixed	
DORI		
DORI Distance (Lens)	2.8 mm	4.0 mm
DORI Distance (Detect)	43.4 m (142.5 ft.)	62.1 m (203.6 ft.)
DORI Distance (Observe)	17.4 m (57.0 ft.)	24.8 m (80.4 ft.)
DORI Distance (Recognize)	8.7 m (28.5 ft.)	12.4 m (40.7 ft.)
DORI Distance (Identify)	4.3 m (14.3 ft.)	6.2 m (20.4 ft.)
Illuminator		
Illumination Distance (IR)	30 m (98.4 ft.)	
Illumination Distance (Warm Light)	30 m (98.4 ft.)	
Wavelength	850 nm	
Light On/Off Control	Auto/Manual	
Supplemental Light	Dual light	
Video		
Video Compression	Ultra 265, H.265, H.264, MJPEG (Sub Stream Only)	
H.264 Code Profile	Baseline profile, Main profile, High profile	
Frame Rate	Main Stream: 1080P (1920 × 1080), max. 30 fps; 720P (1280 × 720), max. 30 fps; Sub Stream: 720P (1280 × 720), max. 30 fps; D1 (720 × 576), max. 30 fps; 640 × 360, max. 30 fps; 2CIF (704 × 288), max. 30 fps; CIF (352 × 288), max. 30 fps	
Video Bit Rate	128 Kbps to 6144 Kbps	
OSD	Up to 4 OSDs	
Privacy Mask	Up to 4 areas	
ROI	Support	

Distribuito da Gamma Commerciale Srl | www.gammacommerciale.it

U-code	Support
Video Stream	Dual streams
Image	
White Balance	Auto, Outdoor, Fine tune, Sodium lamp, Locked, Auto2, Area white balance
Digital Noise Reduction	2D/3D DNR
Smart IR	Support
Flip	Normal, Flip vertical, Flip horizontal, 180°, 90° Clockwise, 90° Anti-clockwise
HLC	Support
Dewarping	N/A
BLC	Support
Defog	Digital defog
Events	
Basic Detection	Motion detection, Ultra motion detection (human/ vehicle detection) , Tampering alarm, Audio detection
General Function	Watermark, IP address filtering, Access policy, ARP protection, RTSP authentication, User authentication, HTTP authentication
Audio	
Audio Compression	G.711U, G.711A, AAC-LC
Audio Bitrate	G.711U/G.711A: 64 kbps, AAC-LC: 128 kbps
Two-way Audio	N/A
Suppression	Support
Sampling Rate	G.711U/G.711A: 8 kHz, AAC-LC: 8 kHz, 16 kHz, 48 kHz
Storage	
Edge Storage	MicroSD, up to 512 GB
Network Storage	ANR, NAS (NFS)
Network	
Protocols	IPv4, IPv6, IGMP, ICMP, ARP, TCP, UDP, DHCP, RTP, RTSP, RTCP, RTMP, DNS, DDNS, NTP, FTP, UPnP, HTTP, HTTPS, SMTP, SSL/TLS, SNMP, QoS, SSH
Compatible Integration	ONVIF (Profile S, Profile G, Profile T), API, SDK
Client	EZStation, APP
Web Browser	Plug-in required live view: IE 10+, Chrome 45+, Firefox 52+, Edge 79+, Plug-in free live view: Chrome 57+, Firefox 58+, Edge 16+
Security	Password protection, Strong Password, HTTPS encryption, Export operation logs, Basic and Digest Authentication for RTSP, Digest Authentication for HTTP, TLS 1.2, WSSE and Digest Authentication for ONVIF
User/Host	Up to 32 users. 3 user levels: administrator, common user and operator
Interface	
Audio I/O	N/A
Alarm I/O	N/A
Serial Port	N/A
Built-in Mic	Support
Built-in Speaker	N/A
WIFI	N/A

Distribuito da Gamma Commerciale Srl | www.gammacommerciale.it

Network	1 × RJ45 10 M/100 M Base-TX Ethernet
Video Output	N/A
Certification	
EMC	CE-EMC (EN 55032, EN 61000-3-3, EN IEC 61000-3-2, EN 50130-4) FCC (FCC 47 CFR part15 B)
Safety	CE-LVD (EN 62368-1) UL/CUL (UL 62368-1, CAN/CSA C22.2 No. 62368-1)
Protection	IP67 (IEC 60529) IK10 (IEC 62262)
Environment	CE-RoHS (2011/65/EU ; (EU) 2015/863) ; WEEE (2012/19/EU)
General	
Power	DC 12 V±25%, PoE (IEEE 802.3af)
Power Consumption	Max. 5.9 W
Power Interface	Ø5.5 mm coaxial power plug
Dimensions	Ø111.0mm × 82.5 mm (Ø4.4" × 3.2") (Ø × H)
Weight	0.35 kg (0.77 lb.)
Working Environment	-30 ℃ to 60 ℃ (-22 ℉ to 140 ℉), Humidity: ≤ 95% RH (non-condensing)
Storage Environment	-30 ℃ to 60 ℃ (-22 ℉ to 140 ℉), Humidity: ≤ 95% RH (non-condensing)
Surge Protection	4 KV
Reset Button	Support
Material	Metal + Plastic
Web Client Language	14 Languages: English, Simplified Chinese, Polish, German, Russian, French, Korean, Dutch, Czech, Portuguese, Spanish, Spanish (Europe), Italian, Turkish

Distribuito da Gamma Commerciale Srl | www.gammacommerciale.it

Dimensions

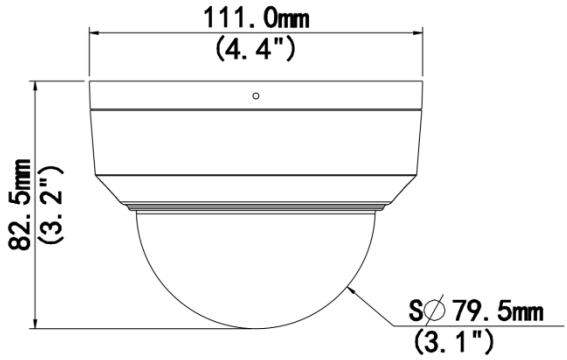

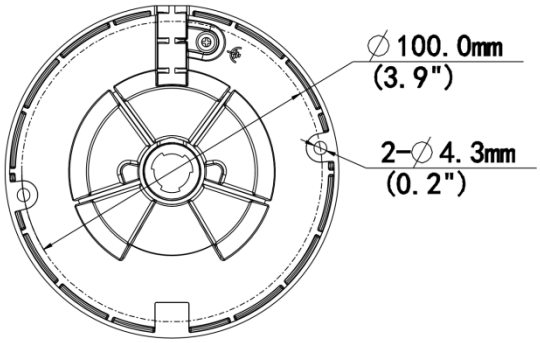

Accessories

TR-JB03-G-IN	HS-205S	TR-JB07/WM03-G-IN-V2
Junction Box for Mini Fix-dome(Support wiring from behind)	Sunshade Shell for Fixed Focus Dome	Wall Mounting Assembling Bracket For 32 Fix-dome&Mini Fix-dome&Plastic Turret Camera
TR-WM03-D-IN-V2	**TR-UM06-E-IN**	**TR-FM116**
Wall Mounting Bracket for 32 Fix-dome&Mini Fix-dome&Plastic Turret Camera	Slant Mounting Bracket for Fixed Dome	In-ceiling Bracket for Fix-dome

Distribuito da Gamma Commerciale Srl | www.gammacommerciale.it

TR-A01-IN NPT 3/4'' Waterproof Cable Gland	**TR-UP06-C-IN-V2** Pole Mounting Bracket for Bullet Junction Box Only	**TR-UC08-C-V2** Bullet&Dome Corner Mounting Bracket
TR-WM07P-B Dome Wall Mounting Plastic Bracket	**TR-SM05-IN** Switch Box Adapter for Fixed Dome	**TR-CM24-IN** Dome Pendent Mounting Bracket(Indoor)
TR-SE24-A-IN Dome Pendent Mounting Pole 500mm	**TR-SE24-IN** Dome Pendent Mounting Pole 200mm	

Distribuito da Gamma Commerciale Srl | www.gammacommerciale.it

Unlimited New View

Zhejiang Uniview Technologies Co., Ltd.

http://www.uniview.com

overseasbusiness@uniview.com; globalsupport@uniview.com

No. 369, Xietong Road, Xixing Sub-district, Binjiang District, Hangzhou City, 310051, Zhejiang Province, China

©2023-2025 Zhejiang Uniview Technologies Co., Ltd. All rights reserved.

*Product specifications and availability are subject to change without notice.

Despite our best efforts, technical or typographical errors may exist in this document. Uniview cannot be held responsible for any such errors and reserves the right to change the contents of this document without prior notice.

Distribuito da Gamma Commerciale Srl | www.gammacommerciale.it