5MP LightHunter Active Deterrence Mini PTZ Camera

IPC6325LFW-AX5C-VG

Features

- High quality image with 5 MP, 1/2.8" CMOS sensor
- Ultra 265, H.265, H.264, MJPEG
- Smart intrusion prevention, supports false alarm filtering, including cross line, intrusion, enter area, leave area detection
- LightHunter technology ensures ultra-high image quality in low illumination environment
- Up to 120 dB WDR (wide dynamic range)
- Built-in mic and speaker
- Smart IR, up to 50 m (164.0 ft) IR distance and 15 m (49.2 ft) warm light distance
- MicroSD, up to 512 GB
- IP66 protection
- DC 12 V, PoE (IEEE 802.3at) power supply

Distribuito da Gamma Commerciale Srl | www.gammacommerciale.it

Specifications

Model	IPC6325LFW-AX5C-VG
Camera	
Max Resolution	5 MP
Sensor	1/2.7" CMOS
Min. Illumination	Color: 0.005 Lux (F1.2, AGC ON), 0 Lux with IR
Day/Night	IR-cut filter with auto switch (ICR)
Shutter	Auto/Manual, 1 to 1/100000 s
WDR	120 dB
S/N	>56 dB
Lens	
Focal Length	2.7 to 13.5 mm
Optical Zoom	5X
Iris	F1.2
Field of View (H)	106.9° to 30.6°
Field of View (V)	56° to 17.7°
Field of View (D)	131.5° to 36.1°
DORI	
DORI Distance (Detect)	70.9 m to 247.5 m (232.5 ft. to 812.0 ft.)
DORI Distance (Observe)	28.4 m to 99.0 m (93.2 ft. to 324.8 ft.)
DORI Distance (Recognize)	14.2 m to 49.5 m (46.5 ft. to 162.4 ft.)
DORI Distance (Identify)	7.1 m to 24.8 m (23.3 ft. to 81.4 ft.)
Video	
Privacy Mask	Up to 4 areas
Video Compression	Ultra 265, H.265, H.264, MJPEG
Frame Rate	Main Stream: 5 MP (2880 × 1620), max. 30 fps Sub Stream: 720P (1280 × 720), max. 30 fps Third Stream: D1 (720 × 576), max. 30 fps
Video Bit Rate	128 Kbps to 16 Mbps
U-code	Support
ROI	Support
Video Stream	Triple streams
OSD	Up to 8 OSDs
Intelligent	
Auto Tracking	Support, target filtering: human only
Smart Intrusion Prevention	Cross line detection, intrusion detection, enter area detection, leave area detection (support false alarm filtering and the classification of human, non-motor vehicle and vehicle)
People Counting	Support people flow counting and crowd density monitoring
Exception Detection	Object removed, Object Left Behind, Scene change, Defocus detection
Image	
White Balance	Auto, Outdoor, Fine tune, Sodium lamp, Locked, Auto2
Digital Noise Reduction	2D/3D DNR

Distribuito da Gamma Commerciale Srl | www.gammacommerciale.it

Flip	Normal, Flip vertical, Flip horizontal, 180°
HLC	Support
BLC	Support
Smart IR	Support
Defog	Digital defog
Illuminator	
Light On/Off Control	Auto/Manual
Wavelength	850 nm
Illumination Distance (IR)	50 m (164.0 ft.)
Illumination Distance (Warm Light)	15 m (49.2 ft.)
Events	
Basic Detection	Motion detection, Tampering alarm, Audio detection, Object removed, Object Left Behind, Scene change, Defocus detection
General Function	Watermark, IP address filtering, Access policy, ARP protection, RTSP authentication, User authentication
Audio	
Audio Compression	G.711U, G.711A
Audio Bitrate	128 Kbps
Two-way Audio	Support
Suppression	Support
Sampling Rate	16KHZ
Storage	
Edge Storage	MicroSD, up to 512 GB
Network Storage	ANR, NAS (NFS)
Network	
Protocols	TLS1.3, SSH, IGMP, RTP, RTCP, SMTP, IPv4, IPv6, ICMP, ARP, TCP, UDP, DHCP, PPPoE, RTSP, RTMP, DNS, DDNS, NTP, FTP, UPnP, HTTP, HTTPS, 802.1x, SNMP, QoS, SSL/TLS
Compatible Integration	ONVIF (Profile S, Profile G, Profile T, Profile M), API, SDK
Security	Password Protection, Strong Password, HTTPS Encryption, Export Operation Logs, Basic and Digest Authentication for RTSP, Digest Authentication for HTTP, TLS 1.2, WSSE and Digest Authentication for ONVIF
Client	EZStation, UNV-Link, UNV-Link Pro
Web Browser	Plug-in required live view: IE 10 and above,Chrome 45 and above,Firefox 52 and above,Edge 79 and above
PTZ	
Number of Presets	1024
Preset Patrol	16 patrols, up to 64 presets for each patrol
Patrol Stay Time	120 s to 1800 s
Home Position	Support
Pan Range	0° to 345°
Tilt Range	-10° to 100°
Pan Speed	1°/s to 50°/s

Distribuito da Gamma Commerciale Srl | www.gammacommerciale.it

Tilt Speed	1°/s to 40°/s
Interface	
Audio I/O	1 Input: impedance 1 kΩ, amplitude 2.5 V [p-p], 1 Output: impedance 600 Ω, amplitude 2.5 V [p-p]
Alarm I/O	1/1
Built-in Mic	Support
Built-in Speaker	Support
Network	1 × RJ45 10 M/100 M Base-TX Ethernet
Certification	
EMC	CE-EMC (EN 55032: 2015+A11: 2020+A1: 2020, EN 50130-4: 2011+A1: 2014, EN 61000-3-3: 2013+A1: 2019+A2: 2021, EN IEC 61000-3-2: 2019+A1: 2021)
Safety	CE LVD (EN 62368-1: 2020+A11: 2020) UL (UL 62368-1, 2nd Ed., Issue Date: 2014-12-01)
Environment	CE-ROHS (2011/65/EU;(EU)2015/863)
Protection	IP66 (IEC 60529:1989+AMD1:1999+AMD2:2013)
General	
Power	DC 12 V (±25%), PoE (IEEE 802.3at)
Power Consumption	18 W
Power Interface	Ø5.5 mm coaxial power plug
Dimensions	185 mm × 133 mm × 286 mm (7.3" × 5.2" × 11.3") (L × W × H)
Weight	1.32 kg (2.91 lb.)
Working Environment	-30°C ~ 60°C (-22°F ~ 140°F), Humidity: ≤95% RH (non-condensing)
Storage Environment	-40℃ ~ 70℃ (-40°F ~ 158°F), Humidity: ≤95% RH (non-condensing)
Surge Protection	2 KV
Reset Button	Support
Heater	Support
Web Client Language	22 Languages: Traditional Chinese, English, Simplified Chinese, Polish, German, Russian, French, Korean, Dutch, Czech, Portuguese (Europe), Portuguese (Brazil), Japanese, Thai, Turkish, Spanish (Latin America), Spanish (Europe), Hungarian, Italian, Vietnamese, Arabic, Slovak
Configurable	
P/N	Support

Distribuito da Gamma Commerciale Srl | www.gammacommerciale.it

Dimensions

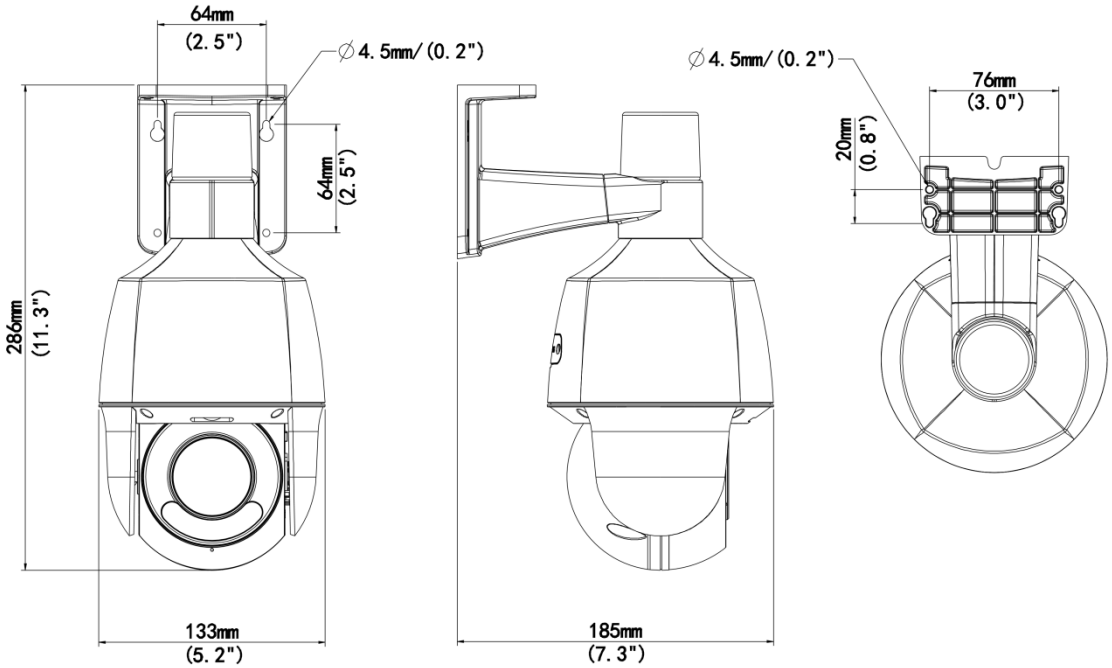

Accessories

TR-JB07-D-IN

Bullet Junction Box(Support wiring from behind)

TR-CM06-D

Alarm Ball Machine Hoisting Bracket

TR-A01-IN

NPT 3/4'' Waterproof Cable Gland

TR-UP06-C-IN

Pole Mounting Bracket for Bullet Junction Box Only

TR-UP06-B-IN

Bullet Pole Mounting Bracket

Distribuito da Gamma Commerciale Srl | www.gammacommerciale.it

Unlimited New View

Zhejiang Uniview Technologies Co., Ltd.

http://www.uniview.com

overseasbusiness@uniview.com; globalsupport@uniview.com

No. 369, Xietong Road, Xixing Sub-district, Binjiang District, Hangzhou City, 310051, Zhejiang Province, China

(Zhejiang) Pilot Free Trade Zone, China

©2023-2025 Zhejiang Uniview Technologies Co., Ltd. All rights reserved.

*Product specifications and availability are subject to change without notice.

*Despite our best efforts, technical or typographical errors may exist in this document.
Uniview cannot be held responsible for any such errors and reserves the right to change the contents of this document without prior notice.

Distribuito da Gamma Commerciale Srl | www.gammacommerciale.it