2MP X25 Lighthunter IR Intelligent Network PTZ Camera

IPC6622SR-X25-VD2

Features

- Wise-ISP image processing engine, intelligent noise reduction, stunning visual effects in low-light conditions
- Smart intrusion prevention (SIP): supports cross line detection, enter area, leave area, and intrusion detection, detects and captures different types of targets including motor vehicles, non-motor vehicles, pedestrians, and raises alarms
- UNV LM-Auto Tracking : Accurately identifies and continuously tracks motor vehicles, non-motor vehicles, and pedestrians-even through occlusion, multi-target crossing, or high-speed motion—with real-time, adaptive bounding boxes for stable, reliable tracking
- People counting: supports people flow counting and crowd density monitoring, applicable to various scenarios
- automatic selection of best snapshots, supports face detection masked area
- 120 dB true WDR meets the image requirements in high-contrast scene
- Heatwave reduction effectively mitigates heatwave effect in high-temperature outdoor environment and ensures clear images
- Adaptive defog automatically adjusts the defog level according to fog and haze intensity
- 200 m (656.2 ft) illumination distance, smart IR illumination, automatically adjusts image settings according to the scene, offering natural and realistic night-time images
- Adaptive highlight compensation (HLC) automatically adjusts image brightness at night when moving vehicles are detected on the road
- Advanced H.265 and SVC video compression technologies, higher compression efficiency, flexible application
- ROI (region of interest) ensures image quality in areas of interest with low bandwidth
- Supports picture overlay and custom OSD, provides various custom effects (size, color, background, style)

Distribuito da Gamma Commerciale Srl | www.gammacommerciale.it

Specifications

Model	IPC6622SR-X25-VD2
Camera	
Max Resolution	2 MP
Sensor	1/2.8" CMOS
Day/Night	IR-cut filter with auto switch (ICR)
Shutter	Auto/Manual, 1 to 1/100000 s
WDR	120 dB
S/N	> 56 dB
Min. Illumination	Color: 0.002 Lux (F1.6, AGC ON), B/W: 0.001 Lux (F1.6, AGC ON), 0 Lux with Light,
Lens	
Focal Length	5 to 125 mm
Digital Zoom	8X
Optical Zoom	25X
Field of View (H)	56.82° to 3.05°
Field of View (V)	31.98° to 1.60°
Field of View (D)	69.90° to 3.60°
DORI	
DORI Distance (Detect)	82.7 m to 1660.3 m (271.3 ft. to 5447.3 ft.)
DORI Distance (Observe)	33.1 m to 664.1 m (108.5 ft. to 2178.9 ft.)
DORI Distance (Recognize)	16.5 m to 332.1 m (54.3 ft. to 1089.5 ft.)
DORI Distance (Identify)	8.3 m to 166.0 m (27.1 ft. to 544.7 ft.)
Video	
Video Compression	H.265, H.264, MJPEG, Ultra 265
Frame Rate	Main Stream Max: 1080P (1920 × 1080), 60 fps Main Stream Default: 1080P (1920 × 1080), 25 fps Sub Stream Max: 1080P (1920 × 1080), 60 fps Third Stream Max: D1 (720 × 576), 60 fps Fourth Stream Max: D1 (720 × 576), 60 fps Fifth Stream Max: D1 (720 × 576), 60 fps
Video Bit Rate	128 Kbps to 16 Mbps
Privacy Mask	24 areas, up to 8 areas per scene
U-code	Support
ROI	Up to 8 areas
Video Stream	Five streams
OSD	Up to 10 OSDs
Frame Rate Recommendation	1080P@60 fps + 1080P@60 fps + D1@60fp + D1@60fp + D1@60fp
Events	
General Function	Watermark, IP address filtering, Access policy, ARP protection, RTSP authentication, User authentication, Alarm input, Alarm output, HTTP authentication

Distribuito da Gamma Commerciale Srl | www.gammacommerciale.it

Audio	
Audio Compression	G.711U, G.711A
Two-way Audio	Support
Suppression	Support
Sampling Rate	8 kHz, 16 kHz
Storage	
Edge Storage	MicroSD, up to 512 GB
Network Storage	NAS (NFS)
Network	
Protocols	SSH, IGMP, RTP, RTMP, RTCP, IPv4, SSL/TLS, QoS, 802.1x, HTTPS, HTTP, UPnP, NTP, DDNS, DNS, RTSP, DHCP, UDP, TCP, ARP, ICMP, IPv6, SMTP, PPPoE, SNMP
Compatible Integration	ONVIF (Profile S, Profile G, Profile T, Profile M), SDK, API
User/Host	Up to 32 users. 3 user levels: administrator, common user and operator
Security	Password Protection, Strong Password, HTTPS Encryption, Export Operation Logs, Basic and Digest Authentication for RTSP, Digest Authentication for HTTP, TLS 1.2, WSSE and Digest Authentication for ONVIF, TLS 1.3
Client	EZStation, UNV-Link, UNV-Link Pro
Web Browser	Plug-in required live view: IE 10+, Chrome 45+, Firefox 52+, Edge 79+, Plug-in free live view: Chrome 57+, Firefox 58+, Edge 16+
PTZ	
Patrol Stay Time	15 s to 1800 s
Preset Image Freeze	Support
Home Position	Support
Number of Presets	1024
Pan Range	360° (endless)
Pan Speed	0.1°/s to 288°/s
Tilt Range	-15° to 90° (auto flip)
Tilt Speed	0.1°/s to 288°/s
Image	
White Balance	Auto, Outdoor, Fine tune, Sodium lamp, Locked, Auto2, Area white balance
Digital Noise Reduction	2D/3D DNR
BLC	Support
Flip	Normal, Flip vertical, Flip horizontal, 180°
HLC	Support
Defog	Digital defog
Low Illumination Characteristics	ColorHunter with Wise-ISP
Image Stabilization	DIS
Heatwave Reduction	Support
Interface	
Audio I/O	1 Input: impedance 1 kΩ, amplitude 2.5 V [p-p], 1 Output: impedance 600 Ω, amplitude 2.5 V [p-p]
Alarm I/O	2/1
Network	1 × RJ45 10 M/100 M Base-TX Ethernet

Distribuito da Gamma Commerciale Srl | www.gammacommerciale.it

Serial Port	1 × RS485
Intelligent	
Exception Detection	Object removed, Object Left Behind
Auto Tracking	UNV Large Model
Smart Intrusion Prevention	Cross line detection, intrusion detection, enter area detection, leave area detection (support false alarm filtering and the classification of human, non-motor vehicle and vehicle)
People Counting	Support people flow counting and crowd density detection
Illuminator	
IR On/Off Control	Auto/Manual
Illumination Distance (IR)	200 m (656.2 ft.)
Certification	
Safety	UL (UL 62368-1) CUL (CAN/CSA C22.2 No. 62368-1) CE-LVD (EN IEC 62368-1)
EMC	CE-EMC (EN 55032; EN IEC 61000-3-2; EN 61000-3-3; EN 50130) FCC SDoC (47 CFR Part 15; Subpart B)
Environment	CE-ROHS (2011/65/EU; (EU) 2015/863) WEEE (2012/19/EU)
Protection	IP67 (IEC 60529) ; IK10 (IEC62262; Anti-Vandalism Except for the Front Window)
General	
Power Interface	Wires with cold-pressed terminal
Dimensions	Ø227 mm × 390 mm (Ø8.9" × 15.4") (Ø × H)
Storage Environment	-40 ℃ to 70 ℃ (-40 ℉ to 158 ℉), Humidity: ≤ 95% RH (non-condensing)
Working Environment	-40 ℃ to 70 ℃ (-40 ℉ to 158 ℉), Humidity: ≤ 95% RH (non-condensing)
Surge Protection	6 KV
Reset Button	Support
Power	DC 24 V±25%, AC 24 V±25%, PoE (IEEE 802.3at)
Configurable	
P/N	Support
Live View	
3D Privacy Mask	Support
Compliance	
NDAA Compliant	Support

Distribuito da Gamma Commerciale Srl | www.gammacommerciale.it

Dimensions

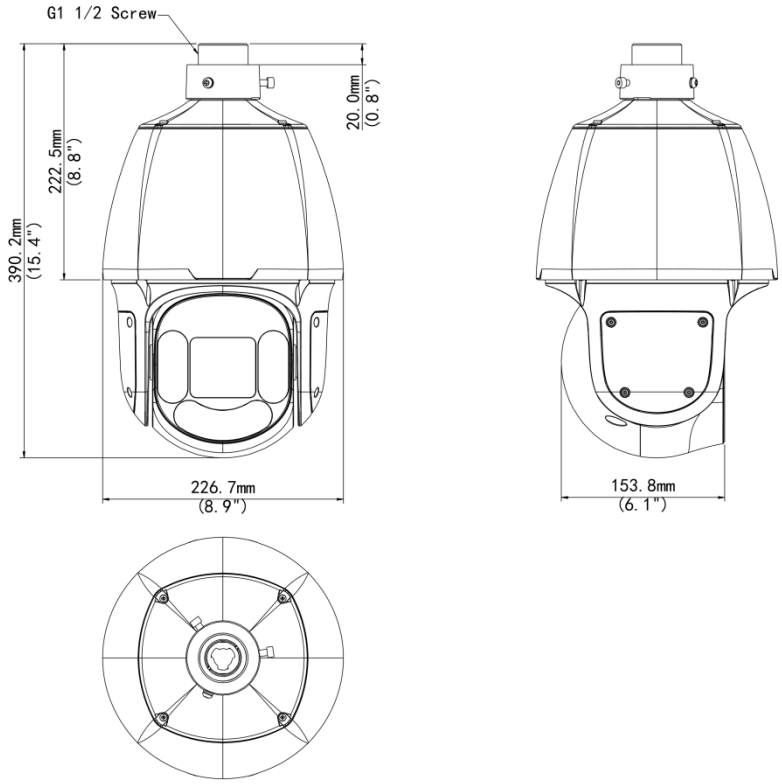

Accessories

TR-UF45-A-IN	TR-SE45-A-IN	TR-SE45-IN
Dome Indoor Ceiling Mounting Pedestal	Dome Ceiling Mounting Pole 500	Dome Ceiling Mounting Pole 200
TR-CE45-IN	**TR-WE45-IN**	**TR-WE45-A-IN**
Dome Indoor Ceiling Mounting Bracket	Dome Wall Mounting Bracket	Long Wall Mounting Bracket for Dome

Distribuito da Gamma Commerciale Srl | www.gammacommerciale.it

TR-JB12-IN Dome Junction Box	**TR-WE45-B-IN** Dome Gooseneck Bracket	**TR-UP08-A-IN** Dome Pole Mounting Bracket
TR-UP08-B-IN Aluminium Alloy Pole Mounting Bracket	**TR-UC08-A-IN** Dome Corner Mounting Bracket	**TR-UC08-B-IN** Aluminium Alloy Corner Mounting Bracket

Distribuito da Gamma Commerciale Srl | www.gammacommerciale.it

Unlimited New View

Zhejiang Uniview Technologies Co., Ltd.

http://www.uniview.com

overseasbusiness@uniview.com; globalsupport@uniview.com

No. 369, Xietong Road, Xixing Sub-district, Binjiang District, Hangzhou City, 310051, Zhejiang Province, China

©2023-2025 Zhejiang Uniview Technologies Co., Ltd. All rights reserved.

*Product specifications and availability are subject to change without notice.

Despite our best efforts, technical or typographical errors may exist in this document. Uniview cannot be held responsible for any such errors and reserves the right to change the contents of this document without prior notice.

Distribuito da Gamma Commerciale Srl | www.gammacommerciale.it