6MP Infrared Intelligent Fixed-focal Fisheye Dome Network Camera

IPC816SB-ADF16KMC-I1

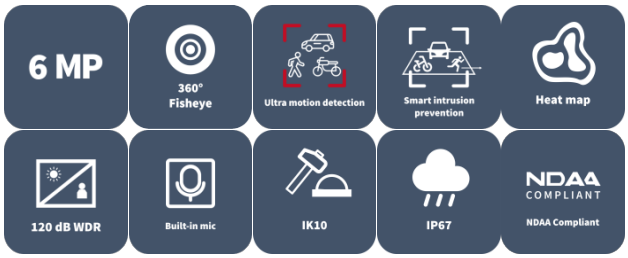

Features

- High quality image with 6 MP, 1/2.5" CMOS sensor
- Max. 2560 × 2560 resolution
- Ultra 265, H.265, H.264, MJPEG
- Supports Wise-ISP technology, deeply optimizing color, detail, and smear effects in extremely low-light scenes
- Smart intrusion prevention, including cross line, intrusion
- Intelligent intrusion prevention system based on target classification significantly reduces false alarms caused by leaves, birds, and lights, accurately focusing on humans, vehicles, and non-motor vehicles
- Support ultra motion detection
- Heatmap: working with management platform, the data of moving objects is counted in real time on an intuitive color map
- Intelligent people flow counting and crowd density monitoring
- Ultra wide angle lens, 360° panoramic image
- Embedded infrared light, 360° fill in light, up to 15 m (49.2 ft.) IR distance
- Multiple decoding modes, supports software and hardware modes, provides interactive dynamic view
- Built in mic and speaker, supports two way audio
- MicroSD, up to 512 GB
- IK10 vandal resistant
- IP67 protection

Distribuito da Gamma Commerciale Srl | www.gammacommerciale.it

Specifications

Model	IPC816SB-ADF16KMC-I1
Camera	
Max Resolution	6 MP
Sensor	1/2.5" CMOS
Min. Illumination	Color: 0.005 Lux (F2.0, AGC ON), 0 Lux with IR
Day/Night	IR-cut filter with auto switch (ICR)
Shutter	Auto/Manual, 1 to 1/100000 s
S/N	> 52 dB
WDR	120 dB
Lens	
Focal Length	1.6 mm
Iris Type	Fixed
Field of View (H)	180 °
Field of View (V)	180 °
Field of View (D)	180 °
Iris	F2.0
Lens Type	Fixed
DORI	
DORI Distance (Lens)	1.6 mm
DORI Distance (Detect)	36.0 m (118.1 ft.)
DORI Distance (Observe)	14.4 m (47.2 ft.)
DORI Distance (Recognize)	7.2 m (23.6 ft.)
DORI Distance (Identify)	3.6 m (11.8 ft.)
Illuminator	
Illumination Distance (IR)	15 m (49.2 ft.)
Supplemental Light	IR
IR On/Off Control	Auto/Manual
Wavelength	850 nm
Video	
Main Stream	Fisheye View: 6 MP (2560 × 2560), max. 30 fps; 2048 × 2048, max. 30 fps; 1440 × 1440, max. 30 fps; Panorama View: 6 MP (2560 × 2560), max. 30 fps; 2048 × 2048, max. 30 fps; 1440 × 1440, max. 30 fps; PTZ View: 1920 × 1080, max. 30 fps;
Sub Stream	Fisheye View: 1024 × 1024, max. 30 fps;
Video Compression	Ultra 265, H.265, H.264, MJPEG
Third Stream	Fisheye View: D1 (720 × 576), max. 30 fps; CIF (352 × 288), max. 30 fps;
H.264 Code Profile	Baseline profile, Main profile, High profile
Video Bit Rate	128 Kbps to 16 Mbps
U-code	Support
OSD	Up to 8 OSDs

Distribuito da Gamma Commerciale Srl | www.gammacommerciale.it

Privacy Mask	Up to 4 areas
ROI	Up to 8 areas
Video Stream	Octuple Streams
Live View Display	
Hardware Decoding	Ceiling mount: fisheye view, fisheye + 4PTZ, horizontal panorama view, vertical panorama view Table mount: fisheye view, fisheye + 4PTZ, horizontal panorama view, vertical panorama view Wall mount: fisheye view, fisheye + 4PTZ, panorama view
Software Decoding	Ceiling mount: fisheye view, 360° panorama + 1PTZ, 180° panorama view, fisheye + 3PTZ, fisheye + 4PTZ, fisheye + 8PTZ, 360° panorama + 6PTZ Table mount: fisheye view, 360° panorama + 1PTZ, 180° panorama view, fisheye + 3PTZ, fisheye + 4PTZ, fisheye + 8PTZ, 360° panorama + 6PTZ Wall mount: fisheye view, 180° panorama view, 180° panorama view + 3PTZ, 180° panorama view + 4PTZ, 180° panorama view + 8PTZ
Image	
White Balance	Auto, Outdoor, Fine tune, Sodium lamp, Locked, Auto2, Area white balance
Digital Noise Reduction	2D/3D DNR
Smart IR	Support
Flip	Normal, Flip vertical, Flip horizontal, 180°
Dewarping	N/A
HLC	N/A
BLC	Support
Defog	Digital defog
Image Stabilization	N/A
Intelligent	
Smart Intrusion Prevention	Cross line detection, intrusion detection (support false alarm filtering and the classification of human, non-motor vehicle and vehicle)
People Counting	Support people flow counting and crowd density detection
Statistical Analysis	Heat map (Working with management platform)
Events	
Basic Detection	Motion detection, Ultra motion detection, Tampering alarm, Audio detection
General Function	Watermark, IP address filtering, Access policy, ARP protection, RTSP authentication, User authentication, HTTP authentication, Alarm input, Alarm output
Audio	
Audio Compression	G.711U, G.711A, AAC-LC
Audio Bitrate	G.711U/G.711A: 64 kbps, AAC-LC: 128 kbps
Two-way Audio	Support
Suppression	Support
Sampling Rate	G.711U/G.711A: 8 kHz, AAC-LC: 8 kHz, 16 kHz, 48 kHz
Storage	
Edge Storage	MicroSD, up to 512 GB
Network Storage	ANR, NAS (NFS)
Network	
Protocols	IPv4, IPv6, IGMP, ARP, TCP, UDP, DHCP, PPPoE, RTP, RTSP, RTCP, RTMP, DNS, DDNS, NTP, FTP,

Distribuito da Gamma Commerciale Srl | www.gammacommerciale.it

	HTTP, HTTPS, SMTP, 802.1x, SNMP, QoS, ICMP, SSL/TLS
Compatible Integration	ONVIF (Profile S, Profile G, Profile T, Profile M), SDK, API
User/Host	Up to 32 users. 3 user levels: administrator, common user and operator
Security	Password protection, Strong Password, HTTPS encryption, Export operation logs, Basic and Digest Authentication for RTSP, Digest Authentication for HTTP, WSSE and Digest Authentication for ONVIF, TLS 1.2
Client	EZStation, APP
Interface	
Audio I/O	1 Input: impedance 35 kΩ, amplitude 2 V [p-p], 1 Output: impedance 600 Ω, amplitude 2 V [p-p]
Alarm I/O	1/1
Serial Port	N/A
Built-in Mic	Built-in dual-mic
Built-in Speaker	Support
Network	1 × RJ45 10 M/100 M Base-TX Ethernet
Video Output	N/A
Certification	
EMC	CE-EMC (EN 55032, EN 61000-3-3, EN IEC 61000-3-2, EN 50130-4) FCC (FCC 47 CFR part15 B)
Safety	CE-LVD (EN 62368-1) UL/CUL (UL 62368-1, CAN/CSA C22.2 No. 62368-1)
Environment	CE-RoHS (2011/65/EU ; (EU) 2015/863) ; WEEE (2012/19/EU)
Protection	IP67 (IEC 60529) IK10 (IEC 62262)
General	
Power	DC 12 V±25%, PoE (IEEE 802.3af)
Power Consumption	Max. 8.4 W
Power Interface	Ø5.5 mm coaxial power plug
Dimensions	Ø126 mm × 52 mm (Ø5.0" × 2.1") (Ø × H)
Weight	0.44kg （0.97lb）
Material	Metal + Plastic
Working Environment	-30 ℃ to 60 ℃ (-22 ℉ to 140 ℉), Humidity: ≤ 95% RH (non-condensing)
Storage Environment	-30 ℃ to 60 ℃ (-22 ℉ to 140 ℉), Humidity: ≤ 95% RH (non-condensing)
Surge Protection	4 KV
Reset Button	Support
Web Client Language	20 Languages: Traditional Chinese, English, Simplified Chinese, Polish, German, Russian, French, Korean, Dutch, Czech, Portuguese (Europe), Portuguese (Brazil), Japanese, Thai, Turkish, Spanish (Latin America), Spanish (Europe), Hungarian, Italian, Vietnamese
RTC	Support

Distribuito da Gamma Commerciale Srl | www.gammacommerciale.it

Dimensions

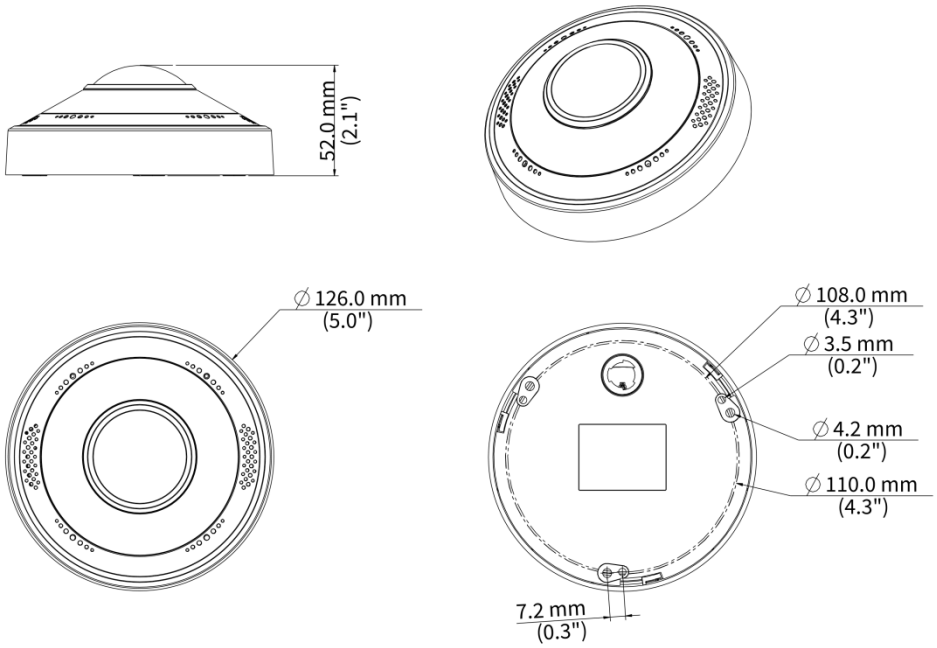

Accessories

TR-JB03-H-IN-V2 Junction Box for Metal Turret Camera(Support wiring from behind)	TR-A01-IN NPT 3/4'' Waterproof Cable Gland	TR-SE24-IN Dome Pendent Mounting Pole 200mm
TR-SE24-A-IN Dome Pendent Mounting Pole 500mm	**TR-CM24-IN** Dome Pendent Mounting Bracket(Indoor)	

Distribuito da Gamma Commerciale Srl | www.gammacommerciale.it

Unlimited New View

Zhejiang Uniview Technologies Co., Ltd.

http://www.uniview.com

overseasbusiness@uniview.com; globalsupport@uniview.com

No. 369, Xietong Road, Xixing Sub-district, Binjiang District, Hangzhou City, 310051, Zhejiang Province, China

©2023-2025 Zhejiang Uniview Technologies Co., Ltd. All rights reserved.
*Product specifications and availability are subject to change without notice.
Despite our best efforts, technical or typographical errors may exist in this document. Uniview cannot be held responsible for any such errors and reserves the right to change the contents of this document without prior notice.

Distribuito da Gamma Commerciale Srl | www.gammacommerciale.it