Network Video Recorder

NVR301-08S4-LW

Features

- 8-channel input
- Up to 8MP resolution recording
- Embedded WiFi Module with high-performance and high stability
- Support CCMP encryption and WPA2-PSK authentication, Support IP cameras with WiFi in access
- Support Ultra 265/H.265/H.264 video formats
- Support 1-ch HDMI, 1-ch VGA
- Support cloud upgrade
- Support mainstream cameras of ONVIF conformance (Profile S, Profile G, Profile T) and RTSP protocols
- 1 SATA HDD, Up to 10TB for each HDD

Specifications

Model	NVR301-08S4-LW
Decoding	
Decoding Format	Ultra 265, H.265, H.264
Decoding Capability	1 x 8MP@30, 2 x 5MP@25, 3 x 4MP@25, 4 x 3MP@25, 6 x 1080P@30, 8 x 720P@30
Decoding Capability Description	The resolution of each channel cannot exceed 3840 pixels in length and 2160 pixels in width
Audio Compression	G.711A, G.711U
Network	
Incoming Bandwidth	64 Mbps
Outgoing Bandwidth	48 Mbps

Distribuito da Gamma Commerciale Srl | www.gammacommerciale.it

Max Users Can Be Added	32
Remote Users	128
Protocols	TCP/IP, P2P, SMTP, RTSP, UPnP, NTP, DHCP, PPPoE, HTTP, HTTPS, DNS, DDNS, IPv4
Browser (Plugin)	IE10, IE11, Chrome 45+, Edge 79+, Firefox 52+
Video/Audio Input	
IP Video Input	8-ch
Video/Audio Output	
Video Output	Support 1-ch HDMI, 1-ch VGA, HDMI and VGA simultaneous output
HDMI Output	4K (3840 × 2160)/30 Hz, 1920 × 1080/60 Hz, 1920 × 1080/50 Hz, 1600 × 1200/60 Hz, 1280 × 1024/60 Hz, 1280 × 720/60 Hz, 1024 × 768/60 Hz
VGA Output	1920 × 1080/60 Hz, 1920 × 1080/50 Hz, 1600 × 1200/60 Hz, 1280 × 1024/60 Hz, 1280 × 720/60 Hz, 1024 × 768/60 Hz
HDMI Standard	HDMI2.0
3.5mm Audio Output	1-ch
Liveview Display	1/4/6/8/9
Default Num of Live Screen	9
Corridor Mode Screen	3/4/5/7/9
Playback Screen	1/4/9
Two-way Audio	
Two-way Audio	N/A
Snapshot	
FTP/Schedule/Event Snapshot	1-ch snapshot (max. D1 (720 × 576) video resolution, with D1 snapshot resolution)
Recording	
Recording Resolution	8 MP/6 MP/5 MP/4 MP/3 MP/1080P/960P/720P/D1/2CIF/CIF
Num of Concurrent Playback	16-ch
Synchronous Playback in Local	8-ch
Smart Function	
VCA Detection by IPC	Face Detection, SIP (Intrusion Detection, Cross Line Detection, Enter Area, Leave Area), Ultra Motion Detection (UMD)
VCA Search	Face Snapshot Search, Behavior Search
Smart by IPC	Total 4-ch(Face Detection, SIP, UMD)
Capacity of Smart Snapshots	
Capacity of Snapshot Records	2 millions records for SIP
Alarm	
General Alarm	Auto Tracking, Motion Detection, Tampering, Human Body Detection, Video Loss, Audio Detection
Alert Alarm	IP Conflict, Network Disconnected, Disk Offline, Disk Abnormal, Illegal Access, Hard Disk Space Low, Hard Disk Full, Recording/Snapshot Abnormal
GUI Language	
GUI Language	21 languages: Chinese, English, Vietnamese, Thai, Turkish, Spanish (Latin America), Portuguese

Distribuito da Gamma Commerciale Srl | www.gammacommerciale.it

	(Brazil), Spanish, Portuguese, French, German, Italian, Dutch, Polish, Czech, Hungarian, Slovak, Russian, Hebrew, Arabic, Ukrainian
Hard Disk	
SATA	1 SATA Interface
Capacity	Up to 24 TB for each HDD (The maximum HDD capacity varies with environment temperature and hard disk size, The environment temperature for use should not exceed 35°C.)
External Interface	
Network Interface	1 RJ45 10 M/100 M self-adaptive Ethernet Interface
USB	Rear panel: 2 × USB2.0
RS485	N/A
RS232	N/A
Alarm In	N/A
Alarm Out	N/A
Buzzer	Support
Power Supply	DC 12 V/2 A
WiFi	
Frequency	2.4 GHz
Transmission Rate	150 Mbps
Wireless Standards	IEEE 802.11b/g/n, IEEE 802.11ax
Working Environment	
Working Temperature	-10 ℃ to 55 ℃ (14 ℉ to 131 ℉)
Working Humidity	≤ 90% RH (non-condensing)
Power Consumption (without HDD)	<12W
Heat Dissipation	Radiator
Dimensions	
Weight (without HDD)	≤0.6Kg (1.32lb)
Height	1U
Dimensions	205mm*205mm*45.6mm
Certification	
Certification	CE; FCC; UL; RoHS; WEEE
CE	EN 55032, EN 61000-3-3, EN IEC 61000-3-2, EN 50130
FCC	Part15 Subpart B
Compliance	
NDAA Compliant	Support

Distribuito da Gamma Commerciale Srl | www.gammacommerciale.it

Dimensions

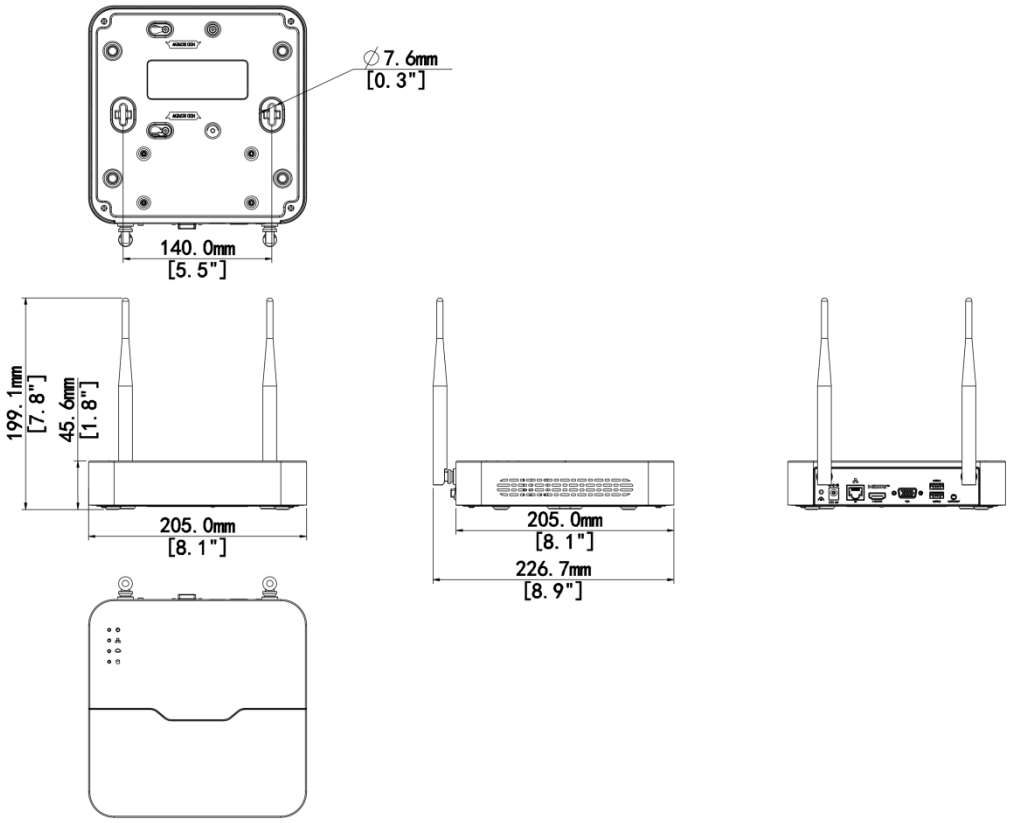

Distribuito da Gamma Commerciale Srl | www.gammacommerciale.it

Unlimited New View

Zhejiang Uniview Technologies Co., Ltd.

http://www.uniview.com

overseasbusiness@uniview.com; globalsupport@uniview.com

No. 369, Xietong Road, Xixing Sub-district, Binjiang District, Hangzhou City, 310051, Zhejiang Province, China

©2023-2025 Zhejiang Uniview Technologies Co., Ltd. All rights reserved.

*Product specifications and availability are subject to change without notice.

Despite our best efforts, technical or typographical errors may exist in this document. Uniview cannot be held responsible for any such errors and reserves the right to change the contents of this document without prior notice.

Distribuito da Gamma Commerciale Srl | www.gammacommerciale.it