EX65 Explosion Protected Illuminator

www.boschsecurity.com

BOSCH
Invented for life

- Electropolished 316L stainless steel or aluminum construction
- 3D diffuser technology for even illumination
- Integrated junction box
- ATEX, UL, IECEx, and INMETRO Certifications
- Constant Light technology

The EX65 Explosion Protected Illuminator is the world's first Intelligent-IR infrared illuminator for explosive environments, combining the latest innovations in infrared technology and design to deliver the highest quality CCTV illumination for critical 24/7 surveillance applications.
The EX65 is available in an electropolished 316L stainless steel or anodized aluminum configuration. When paired with the EX65 Camera, users can expect unrivaled image quality in complete darkness. Energy efficient infrared illumination also eliminates the need for any conventional high voltage lighting to be installed, which cuts costs significantly.
A single pre-assembled unit with an integrated junction box, the EX65 is designed to be easy to install. Through any of the four (4) 3/4 in. conduit entries, connections are made to the convenient terminal block; there is also space for any additional wiring. All connections are conveniently accessible within the junction box including power and telemetry.
Constant Light technology compensates for LED degradation, a natural occurrence with all LED-based illuminators, to deliver a constant level of lighting performance throughout the life of the illuminator.
Powered by award-winning 3D Diffuser IR technology, the EX65 delivers Even-Illumination from the foreground to the background of the scene eliminating hotspots and underexposure.

The EX65 holds all major international explosion-protected certifications for safe use in almost any region of the world. In addition, the EX65 meets NEMA 4X and IP67 ratings. The EX65 has undergone vibration and shock testing to IEC standards, as well as Highly Accelerated Life Testing (H.A.L.T.), which pushes the limits of products to ensure reliability throughout the product's lifetime.
The EX65 gives you the confidence to ensure a safe workplace while getting the picture in the world's most volatile locations.

System Overview

Easy to Install
- One piece installation
- Integrated junction box
- Multiple mounting options

Controlled by Constant Light technology
- Maintains a constant level of infrared performance throughout the life of the illuminator across the temperature range
- Reduces initial input power consumption for a more environmentally-friendly solution

Powered by 3D Diffuser Even Illumination Technology

- Award winning 3D Diffuser IR Technology eliminates hotspots in the foreground and underexposed backgrounds
- Less camera noise reduces IP video bandwidth requirement

Cool Operation Surface Mount LEDs

- Maintains T6 temperature rating
- Reduces power input and consumption

Functions

Construction

The EX65 Explosion Protected Illuminator includes a smart infrared illuminator pre-wired into an electropolished 316L stainless steel housing offering excellent corrosion protection. For less corrosive environments, an anodized aluminum configuration is also available. The EX65 holds the most common explosion-protected certifications for guaranteed safe operation in explosive environments and also NEMA 4X and IP67 ratings for wet locations. For operation in areas prone to vibration, the EX65 has been tested to IEC standards for vibration and shock.

Wide Temperature Range

Designed with the harshest conditions in mind, the EX65 welcomes deployment in the toughest areas on the planet including the subzero conditions found in northern Russia or the scorching heat found in Middle Eastern deserts. The impressive –50°C to +60°C (–58°F to +140°F) temperature range is standard on all models.

Global Explosion Protection Certification

The EX65 holds all major international explosion protected certifications for global installation. As a UL listed product the EX65 is certified for the division and zone system per the NEC standards. For Europe it holds the ATEX certification. The EX65 has been tested against and conforms to the international IECEx scheme. For Brazil the EX65 holds the INMETRO certification.

Integrated Junction Box

The integrated junction box allows for easy connections to the terminal block for power and alarm outputs. An integral junction box saves money and time spent on installing external junction boxes and provides easy access for setup and maintenance.

Certifications and Approvals

Region	Certification
Europe	CE Declaration of Conformity
USA	UL, FCC
Canada	cUL
Brazil	INMETRO
International	ATEX, IECEx

Electromagnetic Compatibility (EMC)

Emission	EN55022 class B, FCC part 15 class B
Immunity	EN 61000-4, EN 50130-4:1996

Safety

UL 508, CAN/CSA C22.2 No. 60065-03, IEC 60825-1

Explosion Protection

UL/cUL Listed 3RR9
UL/cUL Hazardous Locations Listed as per NEC Division and Zone requirements

- Class I, Div 1, Groups C, and D; Class II, Groups E, F, and G; Class III
- Class I, Zone 1, AEx d IIB T6; Ex d IIB T6 X
- AEx tD 21 T85°C
- DIP DIP A21 Ta85°C X

ATEX / IECEx

- DEMKO 10 ATEX 0948139X
- CE 0344 II 2 GD
- Ex d IIB T6 Gb
- Ex tb IIIC T85°C Db IP67

11/UL-BRHZ-0037
UL 1203, UL 60079-0, UL 60079-1, ANSI/ISA-61241-0, ANSI/ISA-61241-1, CAN/CSA C22.2 No. 30-M1986, CAN/CSA C22.2 No. 25-1966, CAN/CSA C22.2 No. 60079-0-07, CAN/CSA C22.2 No. 60079-1-07, CAN/CSA E61241-1-1-02, EN 60079-0:2006, EN 60079-1:2007, EN 60079-31:2009, IEC 60079-0:2009, IEC 60079-1:2007, IEC 60079-31:2008, INMETRO Portaria 179:2010, ABNT NBR IEC 60079-0:2008, ABNT NBR IEC 60079-1:2009

Environmental

UL Type 4X; IP67; Sinusoidal Vibration tested;
Random Vibration tested; Shock tested;
UL50, UL50E, IEC 60529, EN60068-2-6, EN60068-2-64, EN60068-2-27, CAN/CSA C22.2 No. 94.1-07, CAN/CSA C22.2 No. 94.2-07, CAN/CSA C22.2 No. 60529-05

Region	Certification	
USA	UL	E333679 Certificate of Compliance
Europe	CE	Declaration of Conformity
		Certificate of Conformity 11/UL-BRHZ-0037X
USA	UL	DEMKO 10 ATEX 0948139X
	UL	Certificate of Conformity IECEx UL 10.0010X

Installation/Configuration Notes

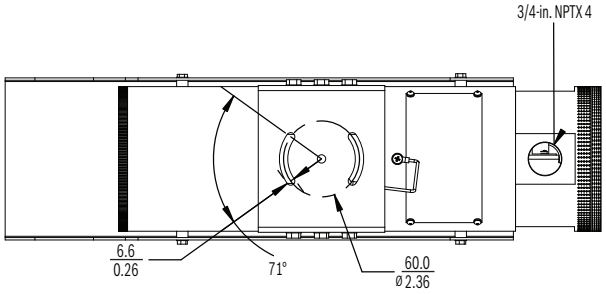

mm
in.

Bottom View

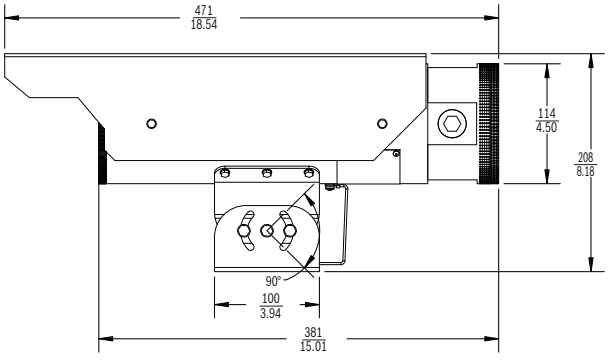

mm
in.

Side View

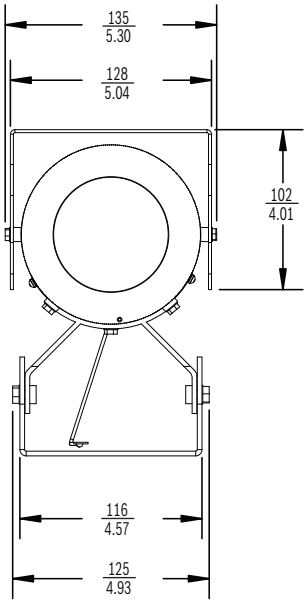

mm
in.

Front View

Technical Specifications

Electrical

IR Source	High-efficiency LED array with current limited integral power circuit
Beam Patterns	20° or 50°
Wavelength	850 nm
Power consumption	37 to 40 W (40 W max. power). Power consumption will vary over time due to the intelligent IR's optical output control which compensates for LED degradation and ambient temperature fluctuations.

Performances Ranges

Model	Horizontal Angle	Achievable Distance[1]	Horizontal Field of View
LED-658-AM/SM	20	54.3 m (178.1 ft)	18.9 m (61.9 ft)
LED-658-AW/SW	50	39.3 m (c ft)	33.2 m (109.0 ft)

1. Actual illumination distance achieved is dependent on camera and lens characteristics. These values are based on test results with an EX65 camera.

Mechanical

Dimensions (L x W x H)	381 x 114 x 114 mm (11.01 x 4.5 x 4.5 in.) without sunhood or mounting cradle
Weight	Stainless Steel: 12.7 kg (28 lb) Aluminum: 6.1 kg (13.5 lb)
Construction	Electropolished 316L Stainless Steel or Anodized Aluminum
Bracket	Pan(±36°)/Tilt(±45°), mounting cradle included
Cable Entry	Four (4) 3/4-in. NPT entries
View Window	9-mm thick borosilicate float glass

Environmental

Operating Temperature	-50 °C to +60 °C (-58 °F to +140 °F)
Storage Temperature	-55 °C to +70 °C (-67 °F to +158 °F)
Operating Humidity	0 to 100% relative (condensing, after installed and sealed)
Storage Humidity	20 to 98% relative (non-condensing)

Ordering Information

LED-658-AM Aluminum EX65 Explosion Protected Illuminator
850 nm, medium angle, 12–24 VDC/VAC
Order number **LED-658-AM**

LED-658-AW Aluminum EX65 Explosion Protected Illuminator
850 nm, wide angle, 12–24 VDC/VAC
Order number **LED-658-AW**

LED-659-AM Aluminum EX65 Explosion Protected Illuminator
940 nm, medium angle, 12–24 VDC/VAC
Order number **LED-659-AM**

LED-659-AW Aluminum EX65 Explosion Protected Illuminator
940 nm, wide angle, 12–24 VDC/VAC
Order number **LED-659-AW**

LED-658-SM Stainless Steel EX65 Explosion Protected Illuminator
850 nm, medium angle, 12–24 VDC/VAC
Order number **LED-658-SM**

LED-658-SW Stainless Steel EX65 Explosion Protected Illuminator
850 nm, wide angle, 12–24 VDC/VAC
Order number **LED-658-SW**

LED-659-SM Stainless Steel EX65 Explosion Protected Illuminator
940 nm, medium angle, 12–24 VDC/VAC
Order number **LED-659-SM**

LED-659-SW Stainless Steel EX65 Explosion Protected Illuminator
940 nm, wide angle, 12–24 VDC/VAC
Order number **LED-659-SW**

220 VAC, 50 Hz, 24 VAC, 50 VA Out
For use with certain 24 VAC camera models.
Order number **UPA-2450-50**

120 VAC, 60 Hz, 24 VAC, 50 VA Out
Order number **UPA-2450-60**

Represented by:

Americas:
Bosch Security Systems, Inc.
130 Perinton Parkway
Fairport, New York, 14450, USA
Phone: +1 800 289 0096
Fax: +1 585 223 9180
security.sales@us.bosch.com
www.boschsecurity.us

Europe, Middle East, Africa:
Bosch Security Systems B.V.
P.O. Box 80002
5617 BA Eindhoven, The Netherlands
Phone: + 31 40 2577 284
Fax: +31 40 2577 330
emea.securitysystems@bosch.com
www.boschsecurity.com

Asia-Pacific:
Robert Bosch (SEA) Pte Ltd, Security Systems
11 Bishan Street 21
Singapore 573943
Phone: +65 6571 2808
Fax: +65 6571 2699
apr.securitysystems@bosch.com
www.boschsecurity.asia

China:
Bosch (Shanghai) Security Systems Ltd.
201 Building, No. 333 Fuquan Road North IBP
Changning District, Shanghai
200335 China
Phone +86 21 22181111
Fax: +86 21 22182398
www.boschsecurity.com.cn

America Latina:
Robert Bosch Ltda Security Systems Division
Via Anhanguera, Km 98
CEP 13065-900
Campinas, Sao Paulo, Brazil
Phone: +55 19 2103 2860
Fax: +55 19 2103 2862
al.securitysystems@bosch.com
www.boschsecurity.com

© Bosch Security Systems 2012 | Data subject to change without notice
2231636747 | en, V2, 11. Jun 2012